EN

TECHNICAL
MANUAL

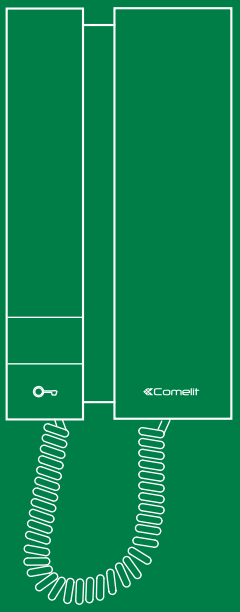

Mini Audio 2703U

Comelit®
Passion. Technology. Design.

Warning

Intended use

This Comelit product was designed for use in the creation of audio and video communication systems in residential, commercial or industrial settings and in public buildings or buildings used by the public.

Installation

All activities connected to the installation of Comelit products must be carried out by qualified technical personnel, with careful observation of the indications provided in the manuals / instruction sheets supplied with those products.

Wires

Use wires with a cross-section suited to the distances involved, observing the instructions provided in the system manual.

We advise against running the system wires through the same duct as the power cables (230V or higher).

Safe usage

To ensure Comelit products are used safely:

- carefully observe the indications provided in the manuals / instruction sheets
- make sure the system created using Comelit products has not been tampered with / damaged.

Maintenance

Comelit products do not require maintenance aside from routine cleaning, which should be carried out in accordance with the indications provided in the manuals / instruction sheets.

Any repair work must be carried out

- for the products themselves, exclusively by **Comelit Group S.p.A**.,
- for systems, by qualified technical personnel.

Disclaimer

Comelit Group S.p.A. does not assume any responsibility for

- any usage other than the intended use
- non-observance of the indications and warnings contained in this manual / instruction sheet.

Comelit Group S.p.A. nonetheless reserves the right to change the information provided in this manual / instruction sheet at any time and without prior notice

Description

Universal door-entry phone, compatible with most of the door-entry phones produced by leading international manufacturers. Ideal in door-entry phone system replacements and repairs.

Fitted with door-open push button and an extra button for additional services with independent common. Electronic ringtone. 3 position ringtone volume. Activation of the *Silent mode* is shown by a red indicator appearing. Can be used for systems with positive common or systems with negative common.

Dimensions: 103 x 190 x 30 mm

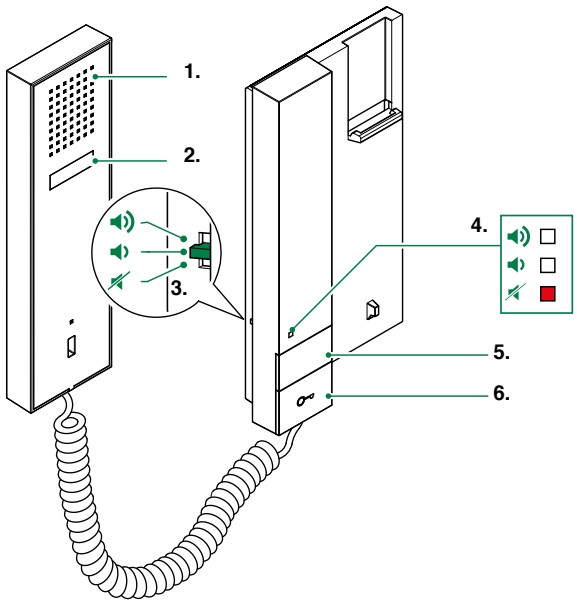

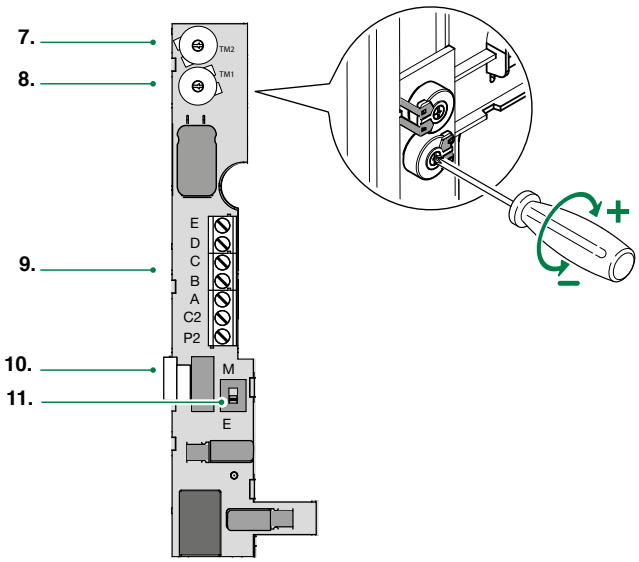

1. Loudspeaker

2. Audio hook

3. Ringtone volume selector

High position: Maximum ringtone volume
Middle position: Medium ringtone volume
Low position: Silent mode *(Privacy)* activation

Silent mode (Privacy) means exclusion of the call ringtone from the external unit and switchboard.

4. Red mark: *Silent mode* enabled

5. P1 (See “Use for various purposes of button P1”)

6. Key button

7. TM2 Loudspeaker volume control (Do not change)

8. TM1 Microphone volume control

9. Terminal block:

E	Loudspeaker
D	Call
C	Common
B	Condenser microphone
A	Lock release
C2 P2	Button P1 C. NO. 24V 100mA

10. Ringtone volume selector

11. Ringtone selector:

M	Ringtone type A *(Default)*
E	Ringtone type B

Installation

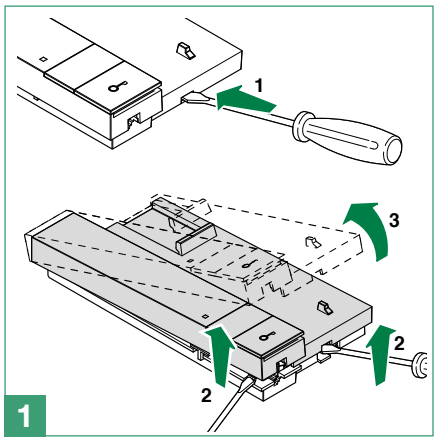

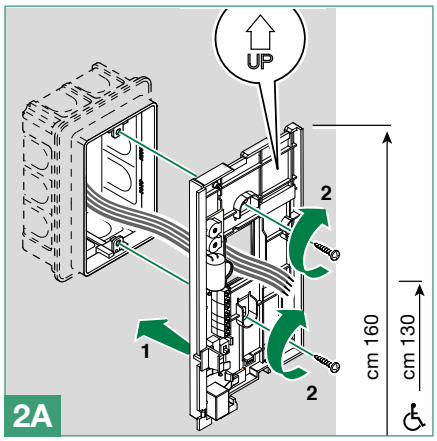

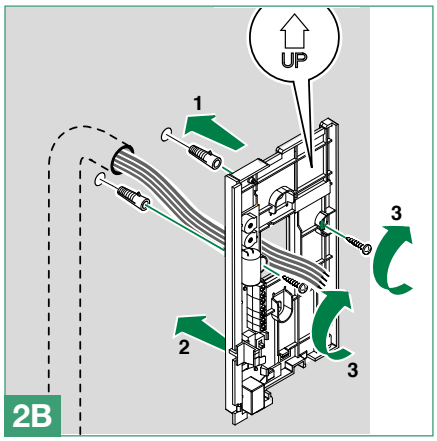

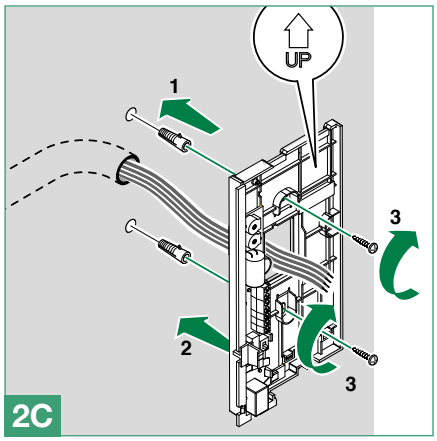

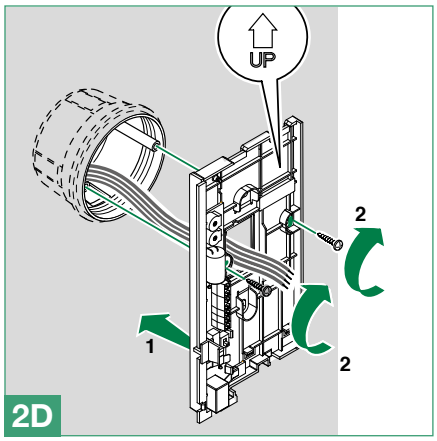

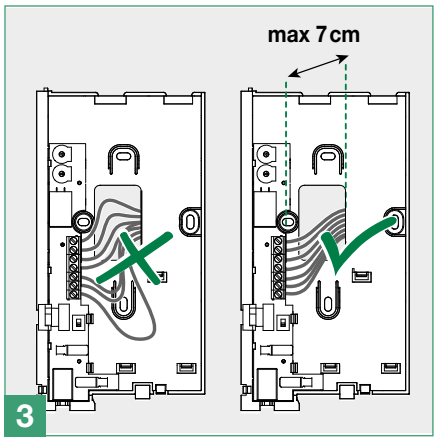

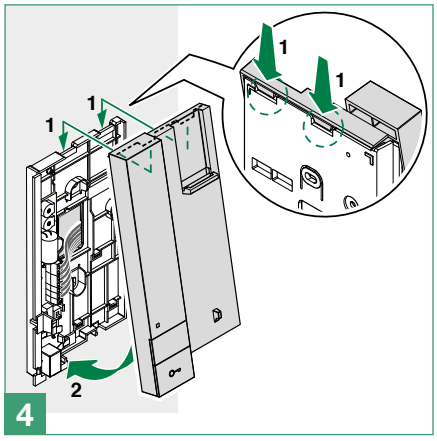

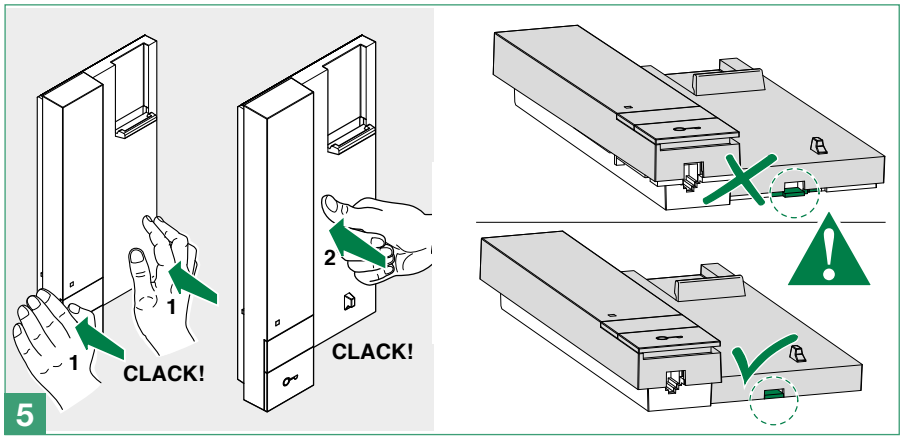

Use for various purposes of button P1

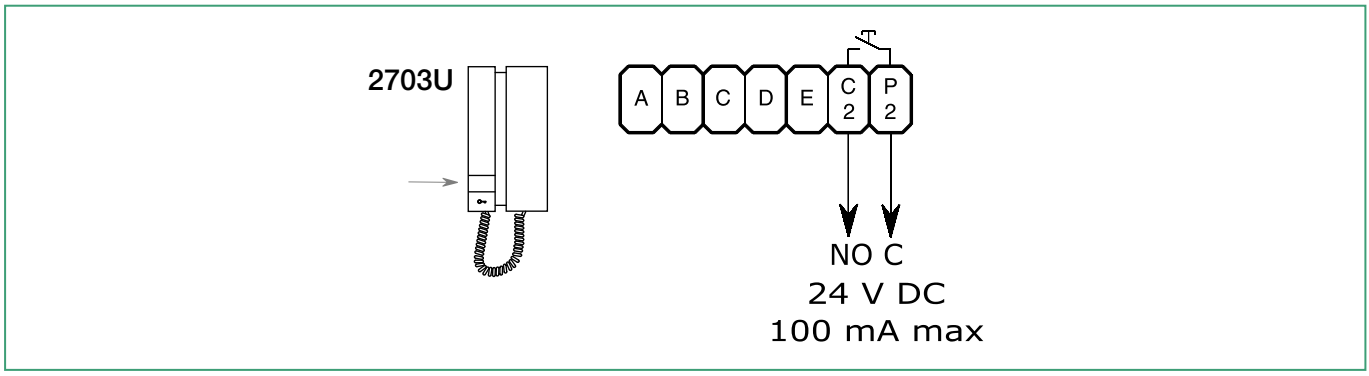

Compatibility table

COMELIT 2703U	A	B	C	D	E	E M
ACET	5	10	2	9	7	M
ALCAD TEL-001 - TEL002	1	3	2	5	4	E
AMPER	D	A	C	E	B	M
ATEA	2	4	3	5	1	M
AUTA	10	3	4	12	7	M
AUTA TF92	10	3	4	12	7	E
AUTELCO	P5	a	1	2	b	M
BELL SYSTEM TELEPHONE	Z	R	O	I	T	M
BITRON	9	2	6	C7	1	E
BOGEN	T	1	3	6	2	M
BPT C/200, XC/200, YC/200	9	9	5	7	8	E
BPT AZ/70, AZ/71, FD/50, FD/51	2	1	4	3	5	M
CENTRAMATIC	4	2	1	5	3	M
CITESA	1	4	C	B	3	M
CITOVOX	5	10	9	T	7	M
COFREL (LT TERRANEO)	T1	1	3	6	2	M
COFREL (LT TERRANEO)	6	4	1	5	3	E
COFREL 600 /603 (LT TERRANEO)	T	1	3	6	2	M
COMELIT VOX 2100 /2102 /2103	P1	3	4	1	2	M
COMELIT VOX 2101 /2104	P1	3	4	S	2	E
COMELIT CIAO 2300 /2301 /2302	P1	3	4	S	2	E
COMELIT CIAO 2304	P1	3	4	1	2	M
COMELIT OKAY 2402W /2404W /2405W	P1	3	4	S	2	E
COMELIT STYLE 2602 /2602E	P1	3	4	S	2	E
COMELIT STYLE 2603U	A	B	C	D	E	E/M
ELBEX		MIC	LOW	+	SPEC	M
ELVOX	2	6	9	+	4	M
ELVOX	7	2	4	6	1	M
ELVOX 6200	7	2	3	6E	1	E
ENTRA 97	1	2	3	5	6	M
ENTRYPHONE	3	P	F,B,G	4	L	M
ERICSSON DEPN 40101	5	3	2	1	4	M
ERICSSON DEPN 60121	3	5	1	4	7	M
FARFISA	5	1	3	6	2	M
FERMAX GONDOLA	4	1	3	V/5	2	M
FERMAX REKTO TF-4	P	A	C	E	B	M
FRINGE	2	3	1	4,*	6	E/M

COMELIT 2703U	A	B	C	D	E	E M
GAME	P	2	3	Z	1	M
GIRO	2	3	1	4	6	M
GOLMAR	X	M	A	N	S	E/M
GOLMAR	C2	5	3	7	10	E
GOLMAR	11	5	3	12	4	M
GOLMAR T-600	T	1	3	6	2	M
GOLAMR T810B	P1	5	3	7	10	M
GOLAMR T-2800	4	5	3	7	10	M
LT TERRANEO (COFREL)	T1	1	3	6	2	M
LT TERRANEO (COFREL)	6	4	1	5	3	E
LT TERRANEO (COFREL) 600 /603	T	1	3	6	2	M
MM DI MARCHESI	1	3	2	5	4	M
OSTELVI	9	2	6	7	1	M
PORMAT	4	3	2	V	1	M
RIPOLLES	3	1	8	4	2	M
RITTO ELEGANT 40518	11	12	13	15	14	E
SAFNAT	4	1	2	V	3	M
SELTI	5	1	3	6	2	M
SIEDLE HT611-01	I	12	9/C	7	11	M
SPRINT	“/“	1	3	6	2	M
STR NH200	1	M	O	T	S	M
STR NH205	1	M	O	T	S	E
TAGRA	8	2	6	4	1	M
TEGUI GL	3	4	2	1	5	M
TEGUI HORIZON	3	4	2	1	5	E/M
TELEVES	4	2	3	T	1	M
TESLA DDZ 85	1	2	3	4	6	M
TESLA DDZ 93	Z	2	3	4	6	M
TUNE	8	2	6	4	1	M
URMET 730/1	9	2	6	7	1	M
URMET DOMUS 1131-1132-1133	9	2	6	CA	1	E
URMET DOMUS 1130	9	2	10	7	1	M
URMET DOMUS 1134	9	2	6	CA	1	E
VIDEX	5	1	3	4	2	E
VIDEX	5	1	7	6	2	M
YUS PHONE	EL	T	-	B/PT	R	M

1ª ed. rev.1 09/2019
cod. 2G40001816

CERTIFIED MANAGEMENT SYSTEMS

ISO 9001

ISO 14001

www.comelitgroup.com

Via Don Arrigoni, 5 - 24020 Rovetta (BG) - Italy

Comelit®
Passion.Technology.Design.