EN

TECHNICAL
MANUAL

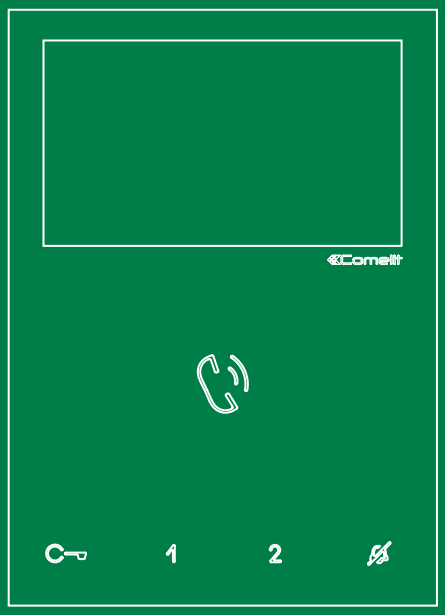

Simplebus2 Mini hands-free door entry monitor

Art. 6721W - Art. 6721W/BM

Comelit®
Passion.Technology.Design.

Warning

Intended use

This Comelit product has been designed and manufactured for use in the creation of audio and video communication systems in residential, commercial, industrial and public buildings.

Installation

All activities connected to the installation of Comelit products must be carried out by qualified technical personnel, with careful observation of the indications provided in the Manuals / Instruction sheets supplied with those products.

Wires

Disconnect the power supply before carrying out any operations on the wiring.

Use wires with a cross-section suited to the distances involved, observing the instructions provided in the system manual.

We advise against running the system wires through the same duct as power cables (230V or higher).

Safe usage

To ensure Comelit products are used safely:

- carefully observe the indications provided in the Manuals / Instruction sheets,
- make sure the system created using Comelit products has not been tampered with / damaged.

Service

Comelit products do not require maintenance aside from routine cleaning, which should be carried out in accordance with the indications provided in the Manuals / Instruction sheets.

Any repairs must be carried out:

- for the products themselves, exclusively by **Comelit Group S.p.A.**,
- for the systems, by qualified technical personnel.

Disclaimer

Comelit Group S.p.A. does not assume any responsibility for

- any usage other than the intended use
- failure to observe the indications and warnings contained in this manual.

Comelit Group S.p.A. reserves the right to change the information provided in this manual at any time and without prior notice.

Table of contents

Description 3
- **Legend: buttons and indicator LEDs** 4
- **Pressing and holding keys** (Disabled by default from firmware version 2.2.0) 4
- **Automatic lock-release on receipt of call (Doctor mode)** 4
- **Automatic Answer (Hands-Free function)** 4
- **Self Activation** 4

Technical specifications 5

Installation 6
- **Removing/Fitting the Terminal** 7

Connections 7

Settings 7
- **Main and secondary door entry monitors** 7

Button configuration 8
- **Basic configuration** 8
  - Legend 8
- **Advanced configuration** 9
- Intercom call 9
  - Introduction 9
  - **General** intercom call: button programming 9
  - Intercom call to selective address: button programming 9
  - Selective intercom address 10
  - Assigning selective address 10
  - Deleting the selective address of the door entry monitor 10
- Generic actuator, coded actuator 10
  - Generic **actuator**: button programming 10
  - Coded **actuator**: button programming 11
- Other functions: button programming 11
- Programming range 11
- Changing the ringtone 12
- Programming reset 12

Addressing table 13

System performance and layouts 13

Description

6721W

Wall-mounted hands-free monitor with full-duplex audio and 4.3” / 16:9 colour screen. Allows brightness level and ringtone volume adjustment; the ringtone can be customised by selecting one of several different melodies. With 5 touch-sensitive buttons with LED backlighting for audio operation, lock-release, self activation, switchboard call and Privacy function, plus a door status indicator LED. Floor door call management as standard. Option of adding 3 additional buttons with accessory art. 6734W. Complete with 2 dip-switches with 8 positions for user code programming and button programming. The backplate for wall mounting or domestic series box installation and the riser distribution terminal art. 1214/2C are included. The monitor can only be used in Simplebus2 systems. Dimensions (L x H x D): 115x160x22 mm.

6721W/BM

Wall-mounted hands-free monitor with full-duplex audio and 4.3” / 16:9 colour screen, plus hearing induction loop. Allows colour, contrast and ringtone volume adjustment; the ringtone can be customised by selecting one of several different melodies. With 5 touch-sensitive buttons with LED backlighting for audio operation, lock-release, self activation, switchboard call and Privacy function, plus a door status indicator LED. Floor door call management as standard. Option of adding 3 additional buttons with accessory art. 6734W. Complete with 2 dip-switches with 8 positions for user code programming and button programming. The monitor can only be used in 2-wire Simplebus2 systems. Dimensions (L x H x D): 115x160x22 mm

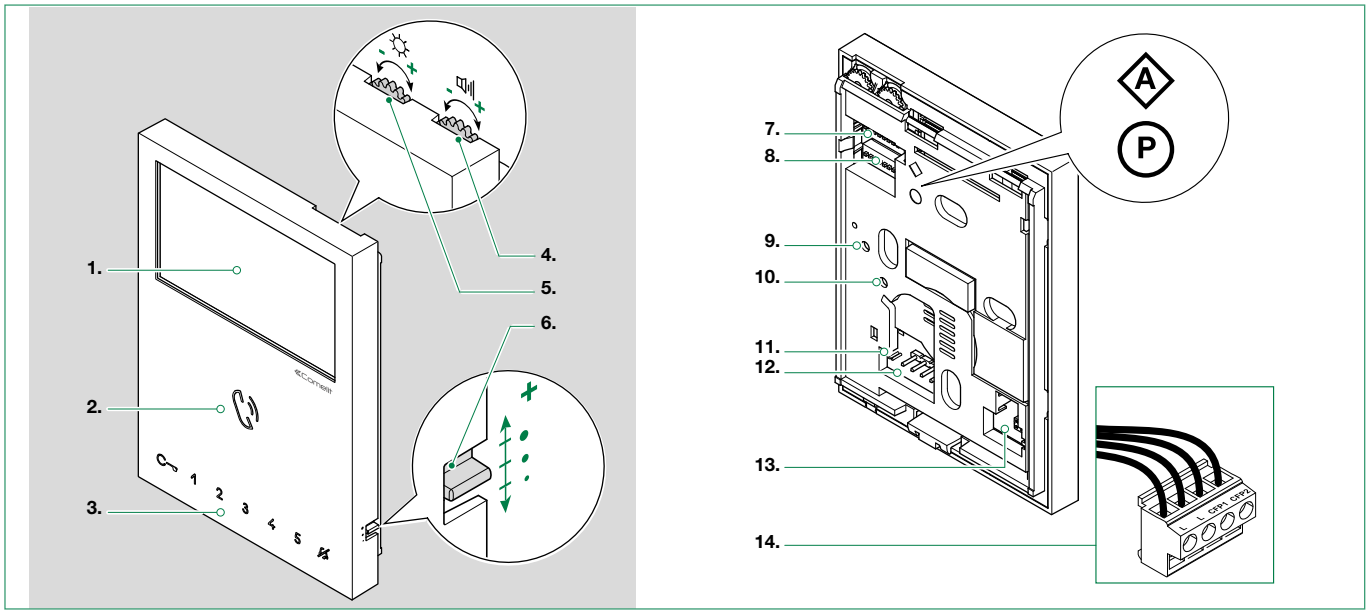

1. 4.3’’ 16:9 LCD screen
2. Speaker and audio activation button
3. Touch-sensitive buttons
4. Loudspeaker volume control
   ▶ *To increase the value, turn clockwise*
5. Brightness control
   ▶ *To increase the value, turn clockwise*
6. Call volume adjustment (high - medium - low)
7. **S1 DIP-switches** Ⓐ Microswitches for assigning user code according to “Addressing table” on page 13)
8. **S2 DIP-switches** Ⓟ Multifunctional microswitches
   DIP 1-2-3-4 for button function programming
   DIP 5-6 for access to programming
   DIP 7 for power supply voltage management. Default ON
   ⚠ *S2 DIP 7 must always be set to ON, even in systems with 4888C and 4888CU (as in the factory settings).*
   DIP 8 for setting main and secondary door entry monitor. Paragraph “Main and secondary door entry monitors” on page 7
9. Factory setting. Do not change!
10. Factory setting. Do not change!
11. **CV 5** Jumper for video closure. In systems with more than one monitor connected in cascade, only the monitor furthest away must have CV5 closed.
12. Pin for securing terminal block
13. Space for housing additional button expansion (Art. 6734W)
14. Terminal block for system connection
    L L Bus line connection terminals
    CFP1 CFP2 Floor door call input

Legend: buttons and indicator LEDs

▶ Press the desired button once to activate the associated function.

Wait for approximately 1 sec. before pressing the same button again. Pressing the same button several times in quick succession will cancel the command.

Description of buttons

AUDIO
▶ Press the button to answer an incoming call.

LOCK-RELEASE (default)*
▶ Press the key to activate the corresponding door lock.

1 **ACTUATOR** (default)*
▶ Press the key to activate the corresponding relay.

2 **SELF ACTIVATION** (default)*
▶ Press the key to access real-time viewing of the camera for the external unit.

RINGTONE IN SILENT MODE (Privacy)
▶ Press the key to enable silencing of the ringtone on receipt of a call from the external unit and from the switchboard.

3 4 5 **ADDITIONAL BUTTONS***
Art. 6734W Additional buttons kit - can be purchased separately.

Indicator LED description

Flashing LED: incoming call
Steady LED in call: in communication
Steady LED in stand-by: Automatic Answer mode enabled

Flashing LED: incoming call
1 flash after pressing button: door open confirmed
Slow flashing: door open

Flashing LED: device in programming mode
4 flashes: system busy
Steady LED: silent mode enabled
3 flashes every 5 sec.: *Automatic Lock-release on receipt of call* function enabled

Other functions that can be programmed:

- **AUTOMATIC LOCK-RELEASE ON RECEIPT OF CALL (Doctor mode)**
  See paragraph "Pressing and holding keys on page 4
- **AUTOMATIC ANSWER (Hands-Free function)**
  See paragraph "Pressing and holding keys on page 4
- **INTERCOM**
  Call from one internal unit to one or more internal units.
- **CALL TO A MAIN OR SECONDARY SWITCHBOARD.**
- **PRIORITY CALL TO SWITCHBOARD ("PAN")**
- **CALL TO CARETAKER DOOR-ENTRY PHONE**

** To edit the default settings, see paragraph "Button configuration" on page 8.*

Pressing and holding keys (Disabled by default from firmware version 2.2.0)

Pressing and holding keys adds further functions to the door entry monitor.

Carry out the procedure described below to enable - or disable, depending on the factory setting - the press and hold feature:

✓ Door entry monitor in standby.
1. Take note of the S2 DIP-switch settings.
2. Enter programming mode by setting S2 DIP-switches 1, 3, 5 to ON.
   » *the LED flashes*
3. Press 1 to enable (or press 2 to disable).
4. Make sure the key flashes 4 times and the confirmation tone is emitted.
5. Restore the initial configuration of the S2 DIP-switches.
   » *LED switches off*

Once the procedure is complete, you will be able to enable the following functions:

Automatic lock-release on receipt of call (Doctor mode)
Automatic activation of the Lock-release relay on receipt of a call originating from the external unit.
▶ *Press and hold (4 sec.) the programmed button to enable/disable the function.*

Automatic Answer (Hands-Free function)
Automatic audio opening on receipt of a call.
▶ *Press and hold (4 sec.) the audio activation button to enable/disable the function.*

Self Activation
▶ *Press and hold (4 sec.) the programmed button to disable the function. (Enabled by default).*

Technical specifications

GENERAL DATA	6721W	6721W/BM
Product height (mm)	160	160
Product width (mm)	115	115
Product depth (mm)	22	22
Product weight (g)	500	500
Product colour	White RAL9003	White RAL9003
Material	ABS	ABS
Surface mounting	Yes	Yes
Desk base mounting	Yes, with specific accessory	Yes, with specific accessory
COMPATIBLE SYSTEMS		
Simplebus2 audio/video with power supply unit art. 4888C	Yes	Yes
Simplebus 2 audio/video with power supply unit art. 1210/1210A	Yes	Yes
Simplebus 2 audio/video kit with power supply unit art. 1209	Yes	Yes
DISPLAY SPECIFICATIONS		
Display size (inches)	4.3”	4.3”
Aspect ratio	16:9	16:9
Resolution (pixels)	480 x 272	480 x 272
AUDIO SPECIFICATIONS		
Magnetic induction function	No	Yes
Microphone	6 mm (Ø), Omnidirectional	6 mm (Ø), Omnidirectional
Loudspeaker	36mm (Ø), 40 Ohm, 1W	36mm (Ø), 40 Ohm, 1W
ELECTRICAL SPECIFICATIONS		
Type of power supply	Power supply via video entry bus	Power supply via video entry bus
Power supply voltage	22 to 34 VDC (Bus)	22 to 34 VDC (Bus)
Minimum absorption (W)	0.05	0.05
Maximum absorption (W)	8.8	8.8
HARDWARE CHARACTERISTICS		
Type of buttons	Capacitive	Capacitive
No. of programmable buttons for additional functions	2 (5 with accessory art. 6734W)	2 (5 with accessory art. 6734W)
Terminals	L L CFP1 CFP2	L L CFP1 CFP2
Removable terminals	Yes	Yes
SETTINGS		
Loudspeaker volume	Yes	Yes
Mic volume	Yes	Yes
Ringtone volume	Yes	Yes
Display brightness	Yes	Yes
Screen contrast	Yes	Yes
Screen colour	Yes	Yes
ENVIRONMENTAL AND CONFORMITY SPECIFICATIONS		
IP protection rating	30	30
Operating temperature (°C)	5 to 40	5 to 40
Operating humidity (max RH - %)	25 to 75	25 to 75
Environmental class	I	I
Conformity and Certifications	RoHS II - 2011/65/EU (EN 50581:2012), EMC 2014/30/EU (EN 61000-6-1:2007, EN 61000-6-3:2007+A1:2011)	RoHS II - 2011/65/EU (EN 50581:2012), EMC 2014/30/EU (EN 61000-6-1:2007, EN 61000-6-3:2007+A1:2011)
FUNCTIONS		
Self Activation	Yes	Yes
Intercom calls	Yes	Yes
Actuator control	Yes	Yes
Switchboard call	Yes	Yes
Input for floor door call	Yes	Yes
Automatic lock-release on receipt of call (Doctor)	Yes	Yes
Automatic answer (Hands-Free)	Yes	Yes
Door open indication	Yes	Yes
Multiple address	Yes	Yes
Customisable ringtone	Yes	Yes
Alarm call transmission	Yes	Yes

Installation

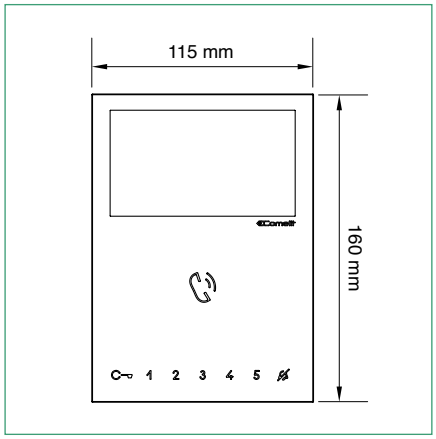

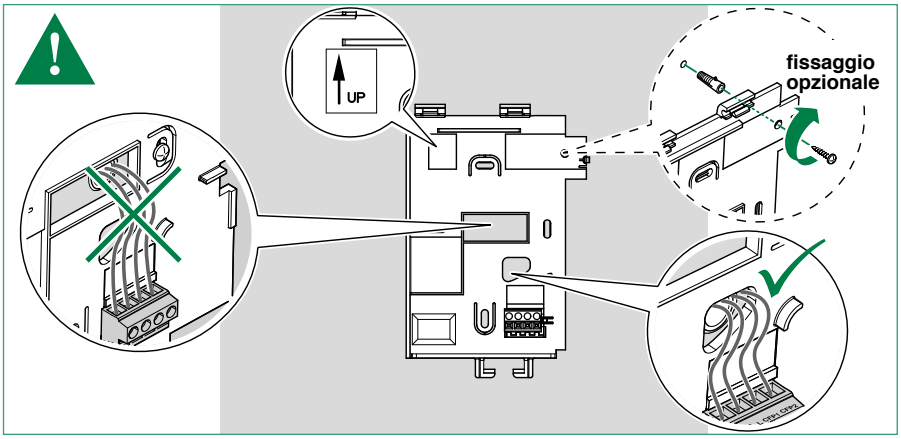

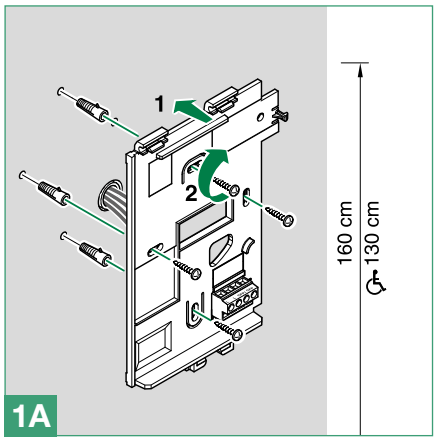

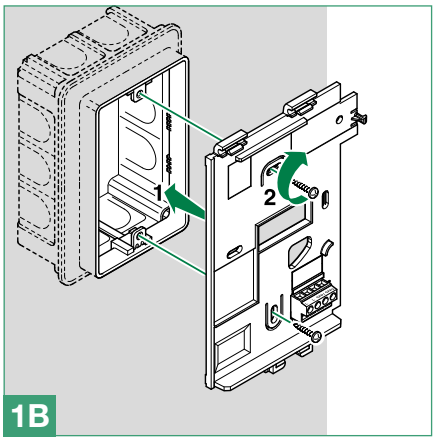

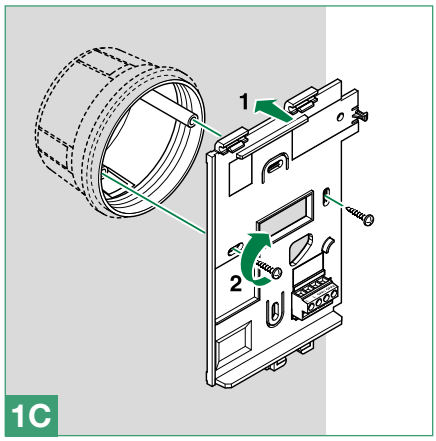

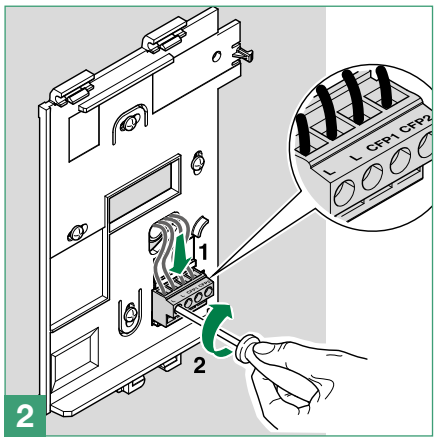

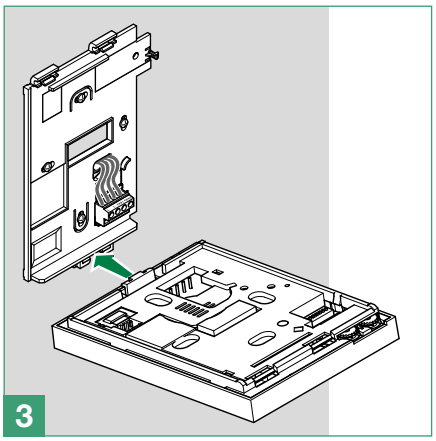

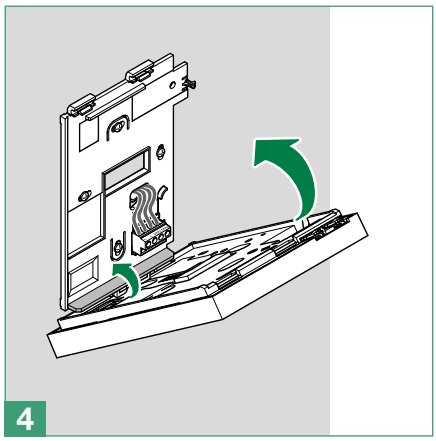

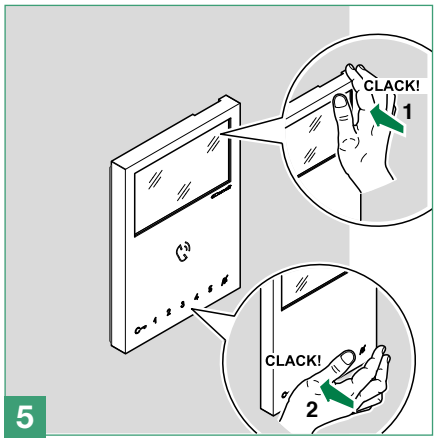

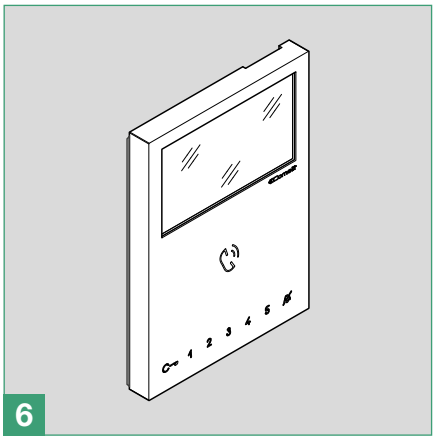

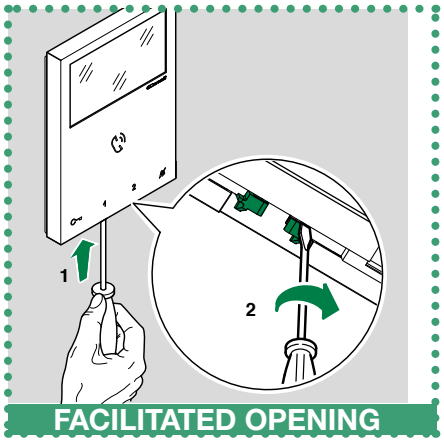

Removing/Fitting the Terminal

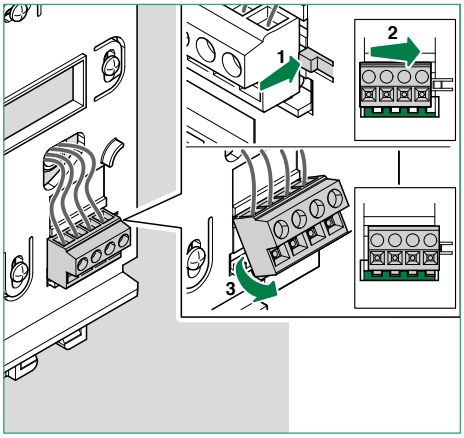

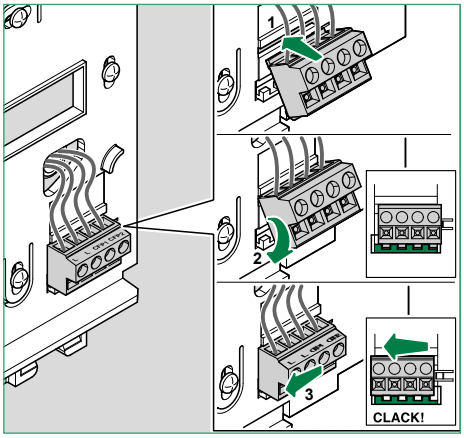

Connections

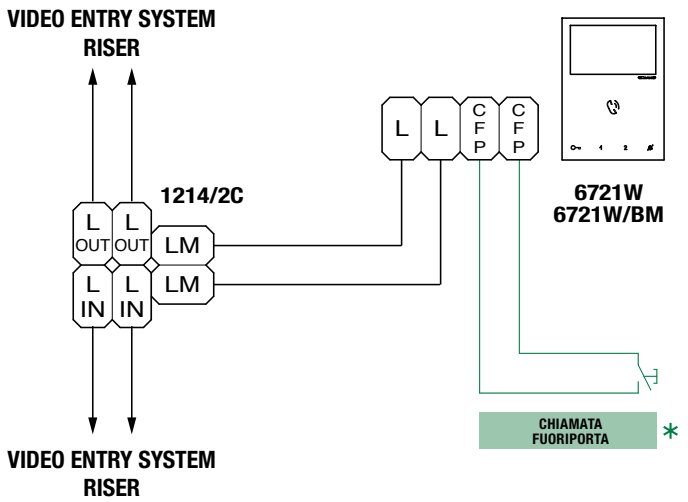

* **20 m MAX** - Use shielded cable for the connection and do not route the cables in the vicinity of heavy inductive loads or power supply cables (230 V/400 V). Where multiple door-entry phones or door entry monitors have the same user code, connect the CFP button on one only; all the devices will ring simultaneously.

Settings

Main and secondary door entry monitors

In systems with power supply unit 1209, 1210 or 1210A it is possible to set a maximum of 1 main door entry monitor.

In systems with power supply unit 4888C it is possible to set a maximum of 2 main monitors.

		MAIN	SECONDARY
S2 (P)	DIP 8	OFF	ON
		1 2 3 4 5 6 7 8	1 2 3 4 5 6 7 8

Button configuration

By default the buttons control the functions in row **A** *("Standard configuration" table).*

It is possible to change the default configuration of the buttons by changing the positions of S2 DIP-switches 1-2-3-4 on the rear of the door entry monitor to one of the combinations (B-P) suggested in the table. All the buttons will change function.

Basic configuration

default		S2 DIP-switches					Mini Vivavoce			+ Art. 6734W		
		DIP 1	DIP 2	DIP 3	DIP 4		🔑	1	2	3	4	5
▶	**A**	**OFF**	**OFF**	**OFF**	**OFF**	▶	**AP**	**ACT**	**AI**	**CCS**	**D**	**PAN**
	B	ON	OFF	OFF	OFF		AP	CCS	AI	INT	INTb	D
	C	OFF	ON	OFF	OFF		AP	INT	AI	INTb	ACT	CCS
	D	ON	ON	OFF	OFF		AP	ACT	CCS	CCP	PAN	K
	E	OFF	OFF	ON	OFF		ACT	ACT	ACT	ACT	ACT	ACT
	F	ON	OFF	ON	OFF		AP	INT	ACT	CCS	CCP	INTb
	G	OFF	ON	ON	OFF		AP	AI	D	K	CCS	CCP
	H	ON	ON	ON	OFF		AP	INTb	INT	AI	INT	PAN
	I	OFF	OFF	OFF	ON		AP	CCS	PAN	D	AI	INTb
	J	ON	OFF	OFF	ON		AP	K	CCS	PAN	CCP	AI
	K	OFF	ON	OFF	ON		AP	CCP	K	PAN	ACT	INT
	L	ON	ON	OFF	ON		AP	PAN	CCP	CCS	K	ACT
	M	OFF	OFF	ON	ON		AP	INTb	AI	INT	ACT	D
	N	ON	OFF	ON	ON		AP	INT	INT	INT	INT	INT
	P	OFF	ON	ON	ON		NULL	NULL	NULL	NULL	NULL	NULL
		ON	ON	ON	ON		PROG					

Legend

AP	Lock-release
ACT	Actuator
AI	Self Activation
CCP	Call to main switchboard [not available in KIT systems]
CCS	Call to secondary switchboard [not available in KIT systems]
K	Caretaker door-entry phone call
PAN	Priority call to switchboard [not available in KIT systems]
INT	Intercom call (general programmable or to selective address). Single-family call default for Kit and Simplebus2
INTb	Two-family intercom call [for KIT only]
D	Automatic door opening on receipt of call [Doctor mode]
NULL	No function
PROG	With these S2 DIP-switch settings, the buttons control the programmed functions as in "Advanced configuration" on page 9.

Advanced configuration

If the standard configuration settings (A-P) do not reflect requirements, the buttons can be programmed differently by carrying out the steps below.

After programming, set S2 DIP-switches 1-2-3-4 (PROG) to ON. With these DIP-switch settings, the buttons manage the programmed functions.

The buttons that are NOT programmed control the functions in row A (“Standard configuration” table).

Intercom call

Introduction

By "**General** intercom call" we mean a call from a door-entry phone/door entry monitor to the devices (in the same apartment or another apartment) identified by the call address for the apartment (user code).

By "Intercom call to **selective address"** we mean a call from a door-entry phone/door entry monitor to a device (or several) identified by a specific (selective) address which is different from the call address for the apartment (user code).

General and selective intercom calls CANNOT be used together on the same riser!

General intercom call: button programming

1. Take note of the S1 DIP-switch settings.

2. To enter programming mode, set S2 DIP-switch 6 to ON.

» *the LED flashes*

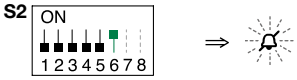

3. Refer to the table “Basic configuration” to identify a DIP-switch combination in which the intercom function (INT or INTb) corresponding to the button you want to program appears, then set the **S2 DIP-switches**.

Example: For button 1= Intercom (INT) set S2 DIP-switches 1-2-3-4 as specified in row "C" in the "Standard configuration" table.

4. Set the **S1 DIP-switches** according to the call address of the desired apartment.

See “Addressing table” on page 13

5. Press and release the button to be associated with the function.

» *Correct procedure indication*: the LED flashes for a few seconds and a confirmation tone sounds.

✓ when programming using several buttons, continue programming the next key by repeating the process from step 4 onwards.

6. Exit programming mode by setting S2 **DIP-switch 6** to OFF.

» *LED switches off*

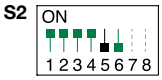

7. Set S2 **DIP-switches 1-2-3-4** to ON.

8. Return S1 DIP-switches to the original combination.

Intercom call to selective address: button programming

1. The steps illustrated in paragraph “Assigning a selective address” should be carried out on the devices involved in the intercom call.

2. Take note of the S1 DIP-switch settings.

3. To enter programming mode, set S2 DIP-switch 6 to ON.

» *the LED flashes*

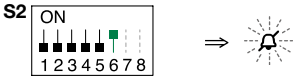

4. Refer to the table “Basic configuration” to identify a DIP-switch combination in which the intercom function (INT or INTb) corresponding to the button you want to program appears, then set the S2 DIP-switches.

5. Use the S1 DIP-switches to set the ***selective*** address of the device you wish to call. **Table B**.

For group calls, simultaneously set the desired selective addresses (max. 3) to ON.

6. Press and release the button to be associated with the function.

» *Correct procedure indication: the LED flashes for a few seconds and a confirmation tone sounds.*

✓ when programming using several buttons, continue programming the next key by repeating the process from step 5 onwards.

7. Exit programming mode by setting S2 DIP-switch 6 to OFF.

» *LED switches off*

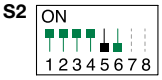

8. Set S2 **DIP-switches 1-2-3-4** to ON.

9. Return S1 DIP-switches to the original combination.

Selective intercom address

TABLE B

Code	S1 DIP-switch ON	Code	S1 DIP-switch ON	Code	S1 DIP-switch ON
1	1	**4**	4	**7**	7
2	2	**5**	5	**8**	8
3	3	**6**	6		

Assigning selective address

(Steps only need to be carried out for "Intercom call to selective address" programming)

1.	2.	3.	4.	
Take note of the S1, S2 settings and **restore them when programming** is complete.	S1: Set an address. (Table B) Example: 3 **S1**	S2: Set the DIP-switches as shown in the figure. **S2**		✓ OK prog: x4 ✗ KO prog: x10

Assign one of the 8 addresses available in TABLE B to each device involved in the intercom call.

- You can assign the **same** selective intercom address to a maximum of 3 devices.

Deleting the selective address of the door entry monitor

1.	2.	3.	
Take note of the S1, S2 settings and **restore them when programming** is complete.	Set the DIP-switches as shown in the figure. **S1** **S2**		✓ OK prog: x4 ✗ KO prog: x10

Generic actuator, coded actuator

Generic **actuator**: button programming

1. Take note of the S1 DIP-switch settings.

2. To enter programming mode, set S2 DIP-switch 6 to ON. **S2**

» *the LED flashes*

3. Refer to the table "Basic configuration" to identify a DIP-switch combination in which the actuator function (ACT) corresponding to the button you want to program appears, then set the S2 DIP-switches.

4. Set all the S1 DIP-switches to the ON position. **S1**

5. Press and release the button to be associated with the function.

» *Correct procedure indication: the LED flashes for a few seconds and a confirmation tone sounds.*

6. Exit programming mode by setting S2 DIP-switch 6 to OFF. **S2**

» *LED switches off*

7. Set S2 DIP-switches 1-2-3-4 to ON.

8. Return S1 DIP-switches to the original combination.

Coded **actuator**: button programming

1. Take note of the S1 DIP-switch settings.

2. To enter programming mode, set S2 DIP-switch 6 to ON.

» *the LED flashes*

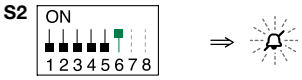

3. Refer to the table "Basic configuration" to identify a DIP-switch combination in which the actuator function (ACT) corresponding to the button you want to program appears, then set the S2 DIP-switches.

4. Set the S1 DIP-switches with the desired code, according to "Addressing table" on page 13

5. Press and release the button to be associated with the function.

» *Correct procedure indication*: the LED flashes for a few seconds and a confirmation tone sounds.

6. Exit programming mode by setting S2 DIP-switch 6 to OFF.

» *LED switches off*

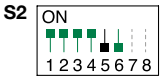

7. Set S2 DIP-switches 1-2-3-4 to ON.

8. Return S1 DIP-switches to the original combination.

Other functions: button programming

1. To enter programming mode, set S2 DIP-switch 6 to ON.

» *the LED flashes*

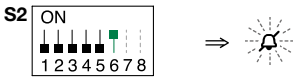

2. Refer to the table "Basic configuration" to identify a DIP-switch combination in which the desired functions corresponding to the buttons you want to program appear, then set the S2 DIP-switches.

Example: For button 4= Self Activation (AI) and button 5 = Call to Secondary Switchboard (CCS), set S2 DIP-switches 1-2-3-4 as specified in row M in the "Standard configuration" table.

3. Press and release the buttons involved in the change.

» *Correct procedure indication*: the LED flashes for a few seconds and a confirmation tone sounds.

4. Exit programming mode by setting S2 DIP-switch 6 to OFF.

» *LED switches off*

5. Set S2 DIP-switches 1-2-3-4 to ON.

Programming range

Take note of the S2, S1 settings and restore on completion of programming

	1.	2.	3.		4.
Range minimum address	S1 ON 1 2 3 4 5 6 7 8 set code. "Addressing table" on page 13	S2 ON 1 2 3 4 5 6 7 8 ⇓	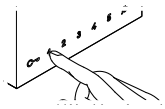		
Range maximum address					
Enable range			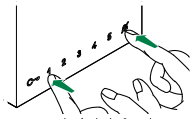		
Disable range			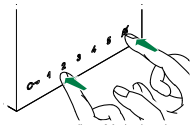	⇒	S2 ON 1 2 3 4 5 6 7 8 ⇓
Deleting the range	S1 ON 1 2 3 4 5 6 7 8	S2 ON 1 2 3 4 5 6 7 8 ⇓	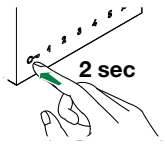 2 sec		

Changing the ringtone

1. Press and hold for 6 sec.
   » a confirmation tone is emitted
   » the LED flashes

   ✓ the procedure can only take place while the system is in standby; otherwise the LED will flash 4 times to inform the user that the system is busy

2. Press and release

   once (1 confirmation tone is emitted) to change the ringtone for calls from the external entrance panel.

   twice (2 confirmation tones are emitted) to change the ringtone for calls from the switchboard.

   3 times (3 confirmation tones are emitted) to change the ringtone for intercom calls made from the door entry monitor.

   4 times (4 confirmation tones are emitted) to change the floor door call ringtone.

   Any further pressing of the button repeats the sequence described above.

3. Press and release 1 to scroll through the available ringtones in sequence.
4. Press the 2 buttonto confirm selection of the last ringtone heard and to exit change ringtone mode.
   » a confirmation tone is emitted
   » LED switches off

Programming reset

Factory settings:

- Button functions for the S2 DIP-switches 1-2-3-4 combination
- Intercom address absent
- Range function and min./max. addresses absent
- Ringtone reset
- Input IN 1 - IN 2 > LED (default)
- “Automatic answer”, “Automatic door opening on receipt of call” and “Silent” mode disabled

1.	2.	3.	
Take note of the S1, S2 settings and **restore them when programming** is complete.	Set the DIP-switches as shown in the figure. **S1** ON 1 2 3 4 5 6 7 8 **S2** ON 1 2 3 4 5 6 7 8 ⇒		✓ OK prog: x4 ✗ KO prog: x10

Addressing table

Code	DIP-switch ON														
1	1	31	1,2,3,4,5	61	1,3,4,5,6	91	1,2,4,5,7	121	1,4,5,6,7	151	1,2,3,5,8	181	1,3,5,6,8	211	1,2,5,7,8
2	2	32	6	62	2,3,4,5,6	92	3,4,5,7	122	2,4,5,6,7	152	4,5,8	182	2,3,5,6,8	212	3,5,7,8
3	1.2	33	1.6	63	1,2,3,4,5.6	93	1,3,4,5,7	123	1,2,4,5,6.7	153	1,4,5,8	183	1,2,3,5,6.8	213	1,3,5,7,8
4	3	34	2.6	64	7	94	2,3,4,5,7	124	3,4,5,6,7	154	2,4,5,8	184	4,5,6,8	214	2,3,5,7,8
5	1.3	35	1,2,6	65	1.7	95	1,2,3,4,5.7	125	1,3,4,5,6.7	155	1,2,4,5,8	185	1,4,5,6,8	215	1,2,3,5,7.8
6	2.3	36	3.6	66	2.7	96	6.7	126	2,3,4,5,6.7	156	3,4,5,8	186	2,4,5,6,8	216	4,5,7,8
7	1,2,3	37	1,3,6	67	1,2,7	97	1,6,7	127	1,2,3,4,5,6,7	157	1,3,4,5,8	187	1,2,4,5,6.8	217	1,4,5,7,8
8	4	38	2,3,6	68	3.7	98	2,6,7	128	8	158	2,3,4,5,8	188	3,4,5,6,8	218	2,4,5,7,8
9	1.4	39	1,2,3,6	69	1,3,7	99	1,2,6,7	129	1.8	159	1,2,3,4,5.8	189	1,3,4,5,6.8	219	1,2,4,5,7.8
10	2.4	40	4.6	70	2,3,7	100	3,6,7	130	2.8	160	6.8	190	2,3,4,5,6.8	220	3,4,5,7,8
11	1,2,4	41	1,4,6	71	1,2,3,7	101	1,3,6,7	131	1,2,8	161	1,6,8	191	1,2,3,4,5,6,8	221	1,3,4,5,7.8
12	3.4	42	2,4,6	72	4.7	102	2,3,6,7	132	3.8	162	2,6,8	192	7.8	222	2,3,4,5,7.8
13	1,3,4	43	1,2,4,6	73	1,4,7	103	1,2,3,6,7	133	1,3,8	163	1,2,6,8	193	1,7,8	223	1,2,3,4,5,7,8
14	2,3,4	44	3,4,6	74	2,4,7	104	4,6,7	134	2,3,8	164	3,6,8	194	2,7,8	224	6,7,8
15	1,2,3,4	45	1,3,4,6	75	1,2,4,7	105	1,4,6,7	135	1,2,3,8	165	1,3,6,8	195	1,2,7,8	225	1,6,7,8
16	5	46	2,3,4,6	76	3,4,7	106	2,4,6,7	136	4.8	166	2,3,6,8	196	3,7,8	226	2,6,7,8
17	1.5	47	1,2,3,4,6	77	1,3,4,7	107	1,2,4,6,7	137	1,4,8	167	1,2,3,6,8	197	1,3,7,8	227	1,2,6,7,8
18	2.5	48	5.6	78	2,3,4,7	108	3,4,6,7	138	2,4,8	168	4,6,8	198	2,3,7,8	228	3,6,7,8
19	1,2,5	49	1,5,6	79	1,2,3,4,7	109	1,3,4,6,7	139	1,2,4,8	169	1,4,6,8	199	1,2,3,7,8	229	1,3,6,7,8
20	3.5	50	2,5,6	80	5.7	110	2,3,4,6,7	140	3,4,8	170	2,4,6,8	200	4,7,8	230	2,3,6,7,8
21	1,3,5	51	1,2,5,6	81	1,5,7	111	1,2,3,4,6.7	141	1,3,4,8	171	1,2,4,6,8	201	1,4,7,8	231	1,2,3,6,7.8
22	2,3,5	52	3,5,6	82	2,5,7	112	5.67	142	2,3,4,8	172	3,4,6,8	202	2,4,7,8	232	4,6,7,8
23	1,2,3,5	53	1,3,5,6	83	1,2,5,7	113	1,5,6,7	143	1,2,3,4,8	173	1,3,4,6,8	203	1,2,4,7,8	233	1,4,6,7,8
24	4.5	54	2,3,5,6	84	3,5,7	114	2,5,6,7	144	5.8	174	2,3,4,6,8	204	3,4,7,8	234	2,4,6,7,8
25	1,4,5	55	1,2,3,5,6	85	1,3,5,7	115	1,2,5,6,7	145	1,5,8	175	1,2,3,4,6.8	205	1,3,4,7,8	235	1,2,4,6,7.8
26	2,4,5	56	4,5,6	86	2,3,5,7	116	3,5,6,7	146	2,5,8	176	5,6,8	206	2,3,4,7,8	236	3,4,6,7,8
27	1,2,4,5	57	1,4,5,6	87	1,2,3,5,7	117	1,3,5,6,7	147	1,2,5,8	177	1,5,6,8	207	1,2,3,4,7.8	237	1,3,4,6,7.8
28	3,4,5	58	2,4,5,6	88	4,5,7	118	2,3,5,6,7	148	3,5,8	178	2,5,6,8	208	5,7,8	238	2,3,4,6,7.8
29	1,3,4,5	59	1,2,4,5,6	89	1,4,5,7	119	1,2,3,5,6.7	149	1,3,5,8	179	1,2,5,6,8	209	1,5,7,8	239	1,2,3,4,6,7,8
30	2,3,4,5	60	3,4,5,6	90	2,4,5,7	120	4,5,6,7	150	2,3,5,8	180	3,5,6,8	210	2,5,7,8	*240	5,6,7,8

* NOTE: Code 240 is reserved for the porter switchboard

System performance and layouts

For further information of system performance and to view installation layouts, click on the system type that best meets your requirements:

- **Audio/video kit** for the creation of audio-video systems for *individual residences*
- **Building Kit audio/video system** for the creation of audio-video systems for *small apartment blocks*
- **SBTOP audio/video system** for the creation of audio-video systems for *residential complexes*.

CERTIFIED MANAGEMENT SYSTEMS
ISO 9001 ISO 14001

www.comelitgroup.com
Via Don Arrigoni, 5 - 24020 Rovetta (BG) - Italy

Comelit®
Passion.Technology.Design.

5st edition 01/2021
code 2G40002648